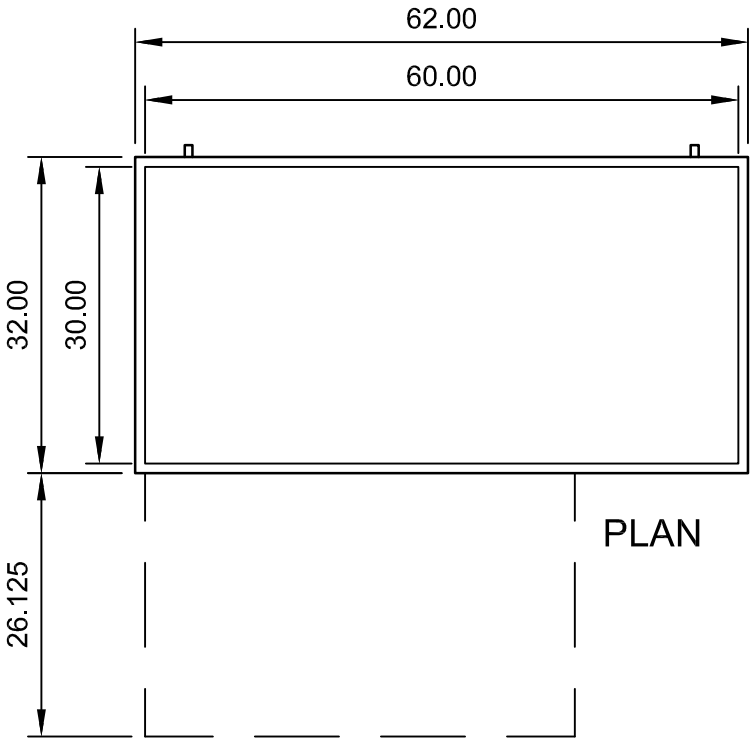

PLAN

ARCTIC AIR
MODEL: ARCB60
REFRIGERATED CHEF BASE

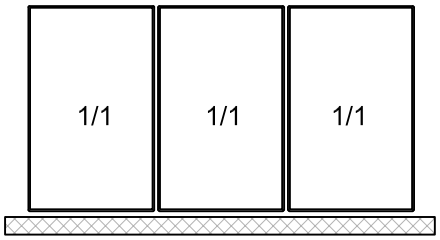

x2

ADAPTOR BARS SHIPPED WITH UNIT

(4) 20-1/2" S/S PAN SUPPORTS

NOTE: DRAWERS ACCEPT 6" DEEP PANS

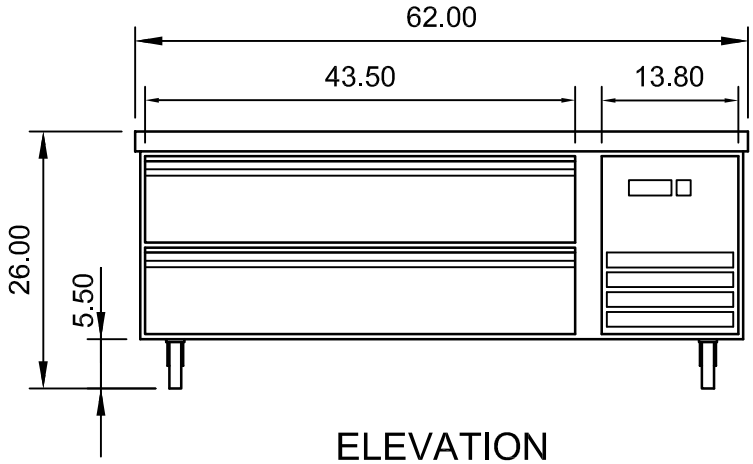

ELEVATION

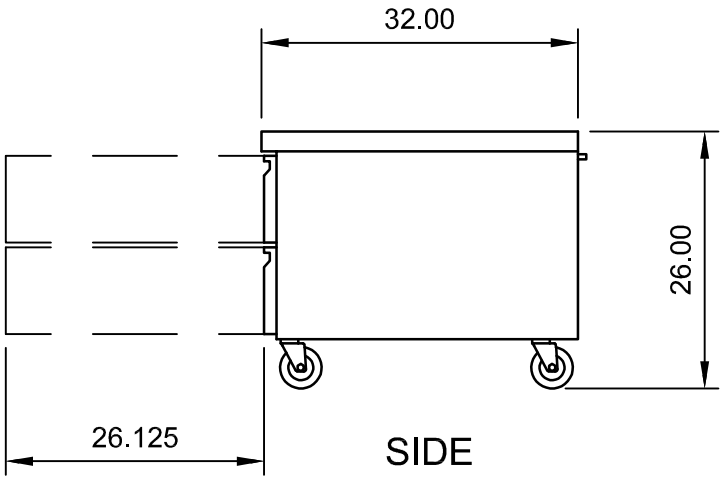

SIDE